This drawing is for information only and must not be used for construction or fabrication, prior to final design.

SEASIDE

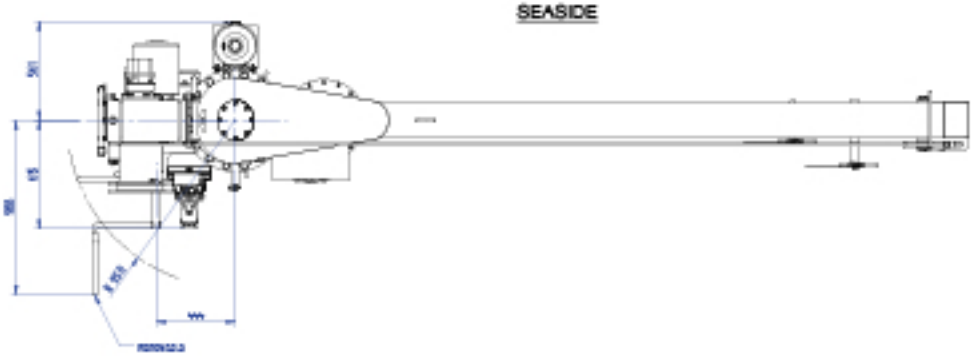

Execution of davit "RH" or "LH"

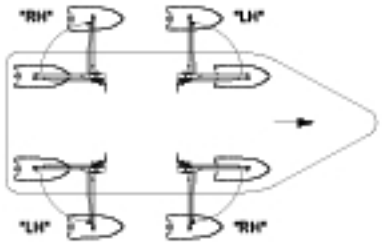

Left-handed execution has been drawn.
See drawing 3A-105123 for RH execution.

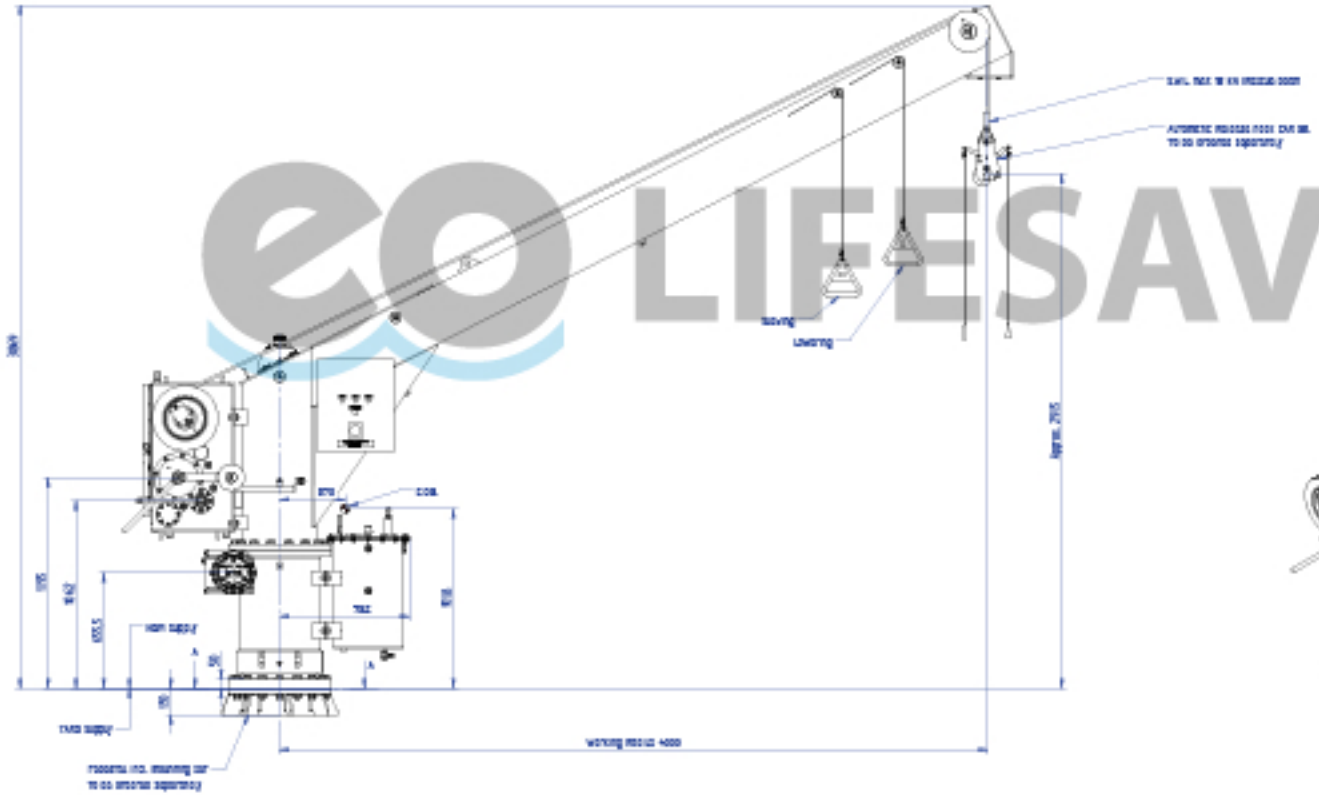

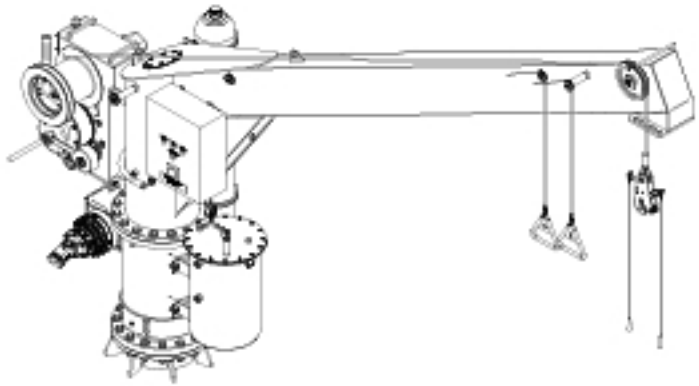

eo LIFESAVING

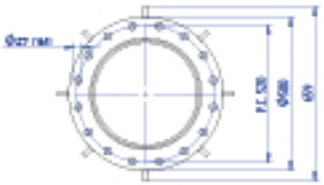

SECTION A-A

Foundation connection parts:

- 10 Bolts M24x120, quality 10.9, DIN 931 H.D.G.
- 10 Nuts M24, quality 10, DIN 934 H.D.G.
- 22 Washers M24 (200HV), DIN 126 H.D.G.

Tightening torque without lubrication = 854 Nm

Total mass approx.: 1936.2 kg

Palfinger Ned-Deck reserves the right to change the product design, materials, and specifications without incurring obligations. Responsibility for the use and application of the product rests with the user.

Title	SCH15-4.0 R LH
Drawn	KVW
Date	20-08-12
Checked	RS
Scale	1:15
Tolerance	NEN-ISO 2768-1
Drawing number	3A-105122
Size	A1
Revision	-

PALFINGER NED-DECK
www.palfingernoddeck.com

File: 3A-105122